Unit : [inch] mm

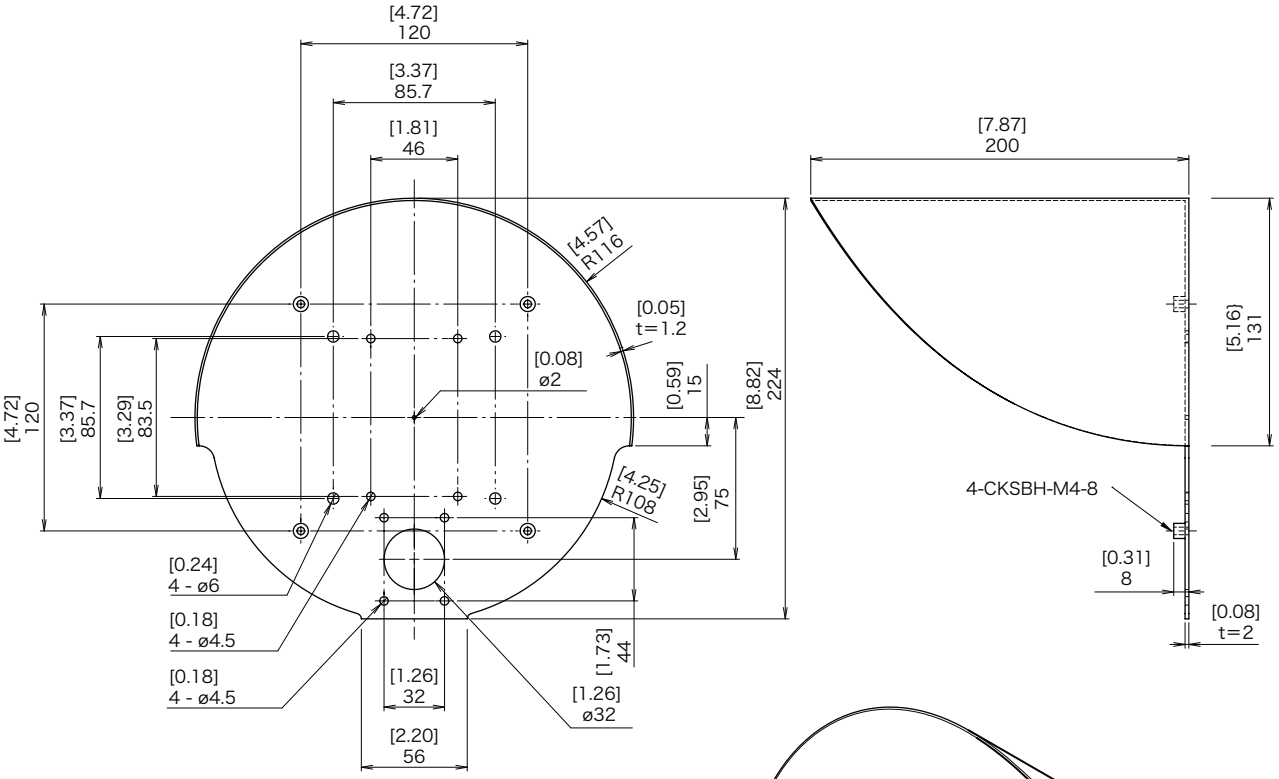

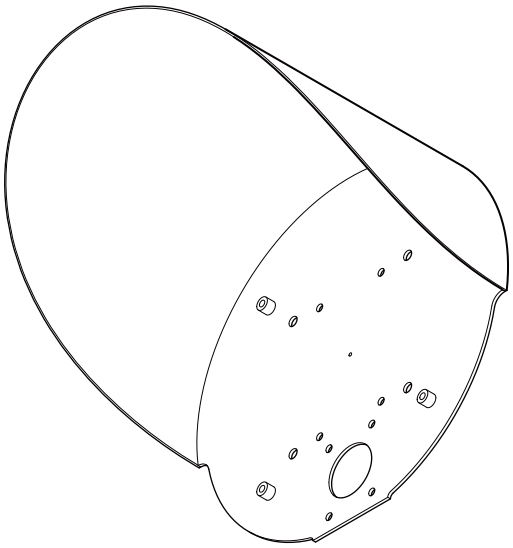

Wall(Side) Mount Bracket with Sunshade

A-SWD5-SC

Specifications

Applicable Housing Model	: A-SWD5 Series
Material	: SUS304
Colo	: Off-white(RAL9002), Powder Coat Finish
Approx. Weight	: 1.2kg(2.7 lbs)
Maximum Height of Screw Head	: 6mm (0.2363")
Standard & Compliance	: RoHS
Accessories Provided	: M4x8 x 4, M4 Washer x 4 (for installation of Housing).
Optional Item	: Tripod Adapter A-SWD5-SCLB

Note: Regarding Compatibility of Camera, you must obtain our confirmation in advance.
Due to Side Mount of Housing, compatibility of camera is different from our website "Housing & Camera Chart".

ASC
ASC Corporation